ARX24-PI

Modulating, Non-Spring Return, 24 V, Multi-Function Technology®

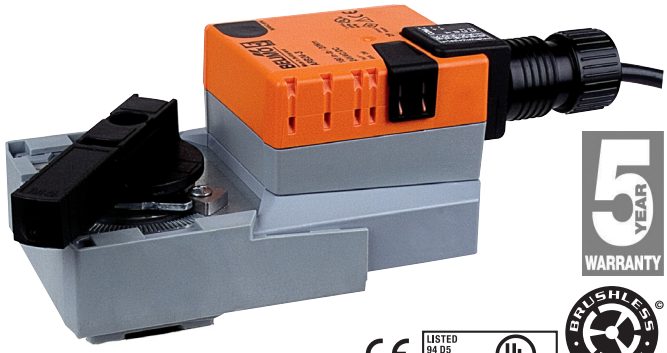

Technical Data	
Power Supply	24 VAC ± 20%, 50/60 Hz, 24 VDC ± 10%
Power Consumption Running	8.5 W
Transformer Sizing	11 VA (class 2 power source)
Electrical Connection	3ft [1m], 18 GA plenum cable with 1/2" conduit connector
Overload Protection	electronic thoughout 0° to 90° rotation
Operating Range Y	2 to 10 VDC, 4 to 20 mA w/ ZG-R01 (500 Ω, 1/4 W resistor)
Input Impedance	100 kΩ (0.1 mA), 500 Ω
Feedback Output U	2 to 10 VDC, 0.5 mA max, VDC variable
Angle of Rotation	90°
Torque	180 in-lbs [20 Nm] minimum
Direction of Rotation (Motor)	reversible with pc tool
Position Indication	integrated into handle
Manual Override	external push button
Running Time (Motor)	90 sec
Ambient Humidity	5 to 95% RH non condensing (EN 60730-1)
Ambient Temperature Range	-22°F to 122°F [-30°C to 50°C]
Storage Temperature Range	-40°F to 176°F [-40°C to 80°C]
Housing	NEMA 2, IP54
Housing Material	UL94-5VA
Agency Listings†	cULus acc. to UL60730-1A/-2-14, CAN/CSA E60730-1:02, CE acc. to 2004/108/EC and 2006/95/EC
Noise Level (Motor)	max. 45 dB (A)
Servicing	maintenance free
Quality Standard	ISO 9001
Weight	2.6 lb [1.2 kg]

In cases where the valve body is electrically isolated from the water pipe, an earth ground should be installed in order for the sensor to work properly. Earth ground can be connected directly on the sensor body. A connection point is provided on the flange of the sensor body.

†Rated Impulse Voltage 800V, Type of action 1.AA, Control Pollution Degree 3

Date created, 10/06/2017 - Subject to change. © Belimo Aircontrols (USA), Inc.

Wiring Diagrams

INSTALLATION NOTES

1 Provide overload protection and disconnect as required.

2 Actuators may be connected in parallel. Power consumption and input impedance must be observed.

3 Actuators may also be powered by 24 VDC.

18 Actuators with plenum cable do not have numbers; use color codes instead.

♦ Meets cULus requirements without the need of an electrical ground connection.

WARNING! LIVE ELECTRICAL COMPONENTS!

During installation, testing, servicing and troubleshooting of this product, it may be necessary to work with live electrical components. Have a qualified licensed electrician or other individual who has been properly trained in handling live electrical components perform these tasks. Failure to follow all electrical safety precautions when exposed to live electrical components could result in death or serious injury.

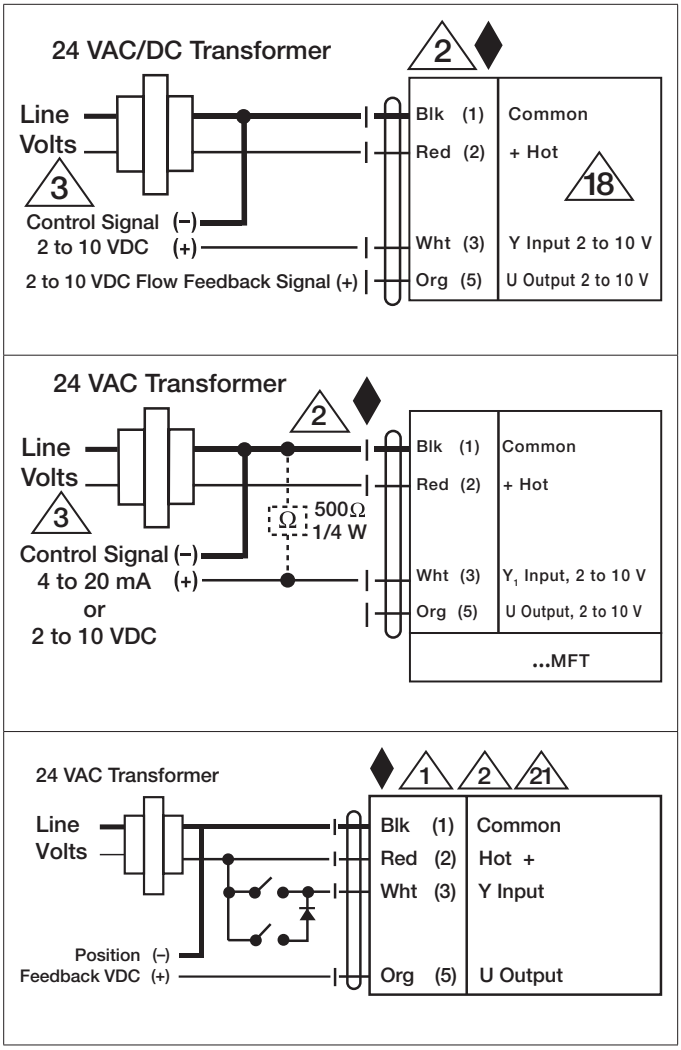

Date created, 10/06/2017 - Subject to change. © Belimo Aircontrols (USA), Inc.